Asian Journal of Nanoscience and Materials, 2018, 2(1), 1-26.

Review article

Polymer-based Material for Lithium-Ion Batteries: Material Engineering, Structure, Device Performance and Challenges

Mutiat Salami[a]*, Hitler Louis[b,c], Saud-uz-Zafar[c], Oluwatobi O. Amusan[a], Thomas O. Magu[b], Adejoke T. Hamzat[a], Amos I. Pigweh[c], Ozioma U. Akakuru[b,d], Aderemi T. Adeleye[e] , Benedict Iserom Ita[b]

[a]*Department of Chemistry, University of Ilorin, Ilorin, Kwara State, Nigeria.*
[b]*Department of Pure and Applied Chemistry, Faculty of Physical Sciences, University of Calabar, Calabar, Cross River State, Nigeria.*
[c]*CAS Key Laboratory for Nanosystem and Hierarchical Fabrication, CAS Centre for Excellence in Nanoscience, National Centre for Nanoscience and Technology, University of Chinese Academy of Sciences, Beijing, China.*
[d]*Ningbo Institute of Materials Technology and Engineering, Chinese Academy of Sciences, Zhejiang, China.*
[e]*Dalian Institute of Chemical Physics, Chinese Academy of Sciences, Dalian, P.R. China.*

Received: 06 August 2018, Revised: 04 October 2018 and Accepted: 14 October 2018.

ABSTRACT: Batteries are a major technological challenge in this new century as they are a vital method to make use of energy efficiently. Nowadays Lithium-ion batteries (LIBs) appeared to be one of the most crucial energy storage technologies. Today's Li-ion technology has conquered the portable electronic markets and still on the track of fast development. The success of lithium-ion technology will depend mainly on the cost, safety, cycle life, energy, and power, which are in turn determined by the component materials used for its fabrication. Accordingly, this review focuses on the challenges of organic based materials and prospects associated with the electrode materials. Specifically, the issues related to organic based batteries, advances and opportunities are presented. This review aims to summarize the fundamentals of the polymer-based material for lithium-ion batteries (LIBs) and specifically highlight its recent significant advancement in material design, challenges, performance and finally its prospects. We anticipate that this Review will inspire further improvement in organic electrolyte materials and the electrode for the battery as energy device storages. Some of these concepts, relying on new ways to prepare electrode materials by the use of eco-efficient processes, on the use of organic rather than inorganic materials to overcome environmental issues associated with their use. Organic electrodes are essential for solid electrode batteries because they can make device cost-effective, allow flexibility, and can also enable the use of multivalent ions without the problems typically associated with inorganic compounds.

KEYWORDS: Polymer, Lithium, ion, Battery, performance.

GRAPHICAL ABSTRACT:

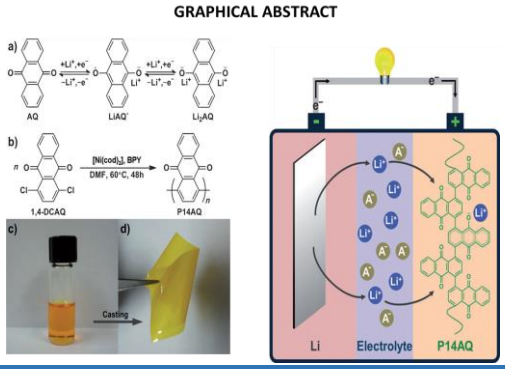

*Corresponding author: Hitler Louis, Email: Louis@nanoctr.cn

Asian Journal of
Nanoscience and
Materials

1. Introduction

Li-ion batteries are one of the most cutting-edge successes of modern electrochemistry. Li-ion battery technology has become very applicable in recent years as these batteries show great potential as power sources that can lead us to the Electric Vehicle (EV) revolution and are the most popular rechargeable batteries [1]. In the past three decades, tremendous research effort has been made to investigating the electrochemical performance of varieties of active materials and electrolytes.

In the early era of lithium cells, metal chalcogenides (e.g., TiS_2 and MoS_2) and manganese or vanadium oxides were used as a positive electrode to pair with the metallic Li or the graphite anode which eventually led to the commercial success of rechargeable Li-ion batteries [2].

During the last decade, the introduction of high-capacity lithium-storage materials such as Sn/Si alloys and transition metal oxides has positively contributed to the development of high-energy batteries [3]. Recently, considerable interest has been diverted toward poly anion-based compounds ($LiFePO_4$ in particular), which potentially enable low cost and high safety. Lithium-ion batteries consist of lithium ions which move from the negative electrode to the positive electrode during discharge and back when charging. The lithium-ion batteries use an intercalated lithium compound as one electrode material, compared to the metallic lithium used in a non-rechargeable lithium battery [4].

The positive and negative electrodes and the electrolyte are the three primary functional components of a lithium-ion battery. Generally, the negative electrode of a conventional lithium-ion cell is made from carbon. The positive electrode is a metal oxide, and the electrolyte is a lithium salt in an organic solvent. Since the launch of a commercial Li-ion battery by Sony in 1991, graphite has been the predominant anode material.

Graphite is a crystalline, layered material consisting of individual sp2-bonded graphene sheets held together by van der Waals forces. It was chosen as the anode material because it is relatively inexpensive, easy to handle, abundant as well as good cycling stability and safety characteristic features [6]. Because Li interacts weakly with graphite, its intercalation into graphite occurs at approximately 100mV, which is sufficient to disallow plating of Li

Asian Journal of Nanoscience and Materials

and formation of Li dendrites that could short the electrodes and lead to thermal instability [7], while keeping a relatively high energy density of the cell. When used as the anode in Li-ion batteries, graphite has a theoretical capacity of 372mAhg^{-1} (gravimetric basis) and 830Ah L^{-1} (volumetric basis).

Graphite intercalates lithium reversibly to form LiC_6, according to the following reaction:

$C_6 + Li^+ + e^- \leftrightarrow LiC_6$.

The diffusion of Li into (charge/intercalation) and out of (discharge/deintercalation) graphite causes volumetric changes of up to ∼10% because Li ions occupy space between graphene layers, slightly expanding the structure [8].

During the past decade, much research effort has been directed toward identifying alternative anode materials that involve new chemistry and are capable of higher theoretical capacity, higher charge/discharge rate, and greater electrode stability. Unlike the anode, for which high–storage capacity materials are known to exist, the comparatively low storage capacity of most known cathode materials has been recognized as a major limiting factor in the overall performance of Li-ion batteries.

Since the successful introduction of the $LiCoO_2$ cathode in 1991, other positive electrodes that have been investigated for commercial applications fall mainly into two categories [9, 10].

The first group is layered lithium compounds with a close-packed oxygen anion lattice, in which transition metal cations occupy alternate layers between the anions and Li ions are intercalated into the remaining empty layers. The compounds in this group have the advantage of higher operating voltage and specific energy compared to the second group as a result of their highly oxidizing redox-active couples and more compact lattices [11-14].

The electrolyte is one of the most important, and most often overlooked, components of a Li-ion battery. In addition to its primary function of shuttling Li ions between the two electrodes, reductive decomposition of the electrolyte is the main contributor to the formation of Solid Electrolyte Interphase (SEI). Because typical cell voltages for Li-ion batteries are beyond the voltage for decomposition of water and lithium is highly reactive to water, organic solvents are

Asian Journal of Nanoscience and Materials

generally employed as electrolyte solutions [15-17].

A typical battery converts chemical energy into electrical energy through a controlled thermodynamically favorable chemical reaction. For a rechargeable battery, this transformation must be reversible. This overall reaction is partitioned into two half-reactions, each of which involves reaction with or removal of Li or Li ions from the active material.

By convention, reduction (gain of electrons and Li ions) occurs at the cathode, while oxidation (loss of electrons and Li ions) occurs at the anode during a discharge reaction, i.e., when the conversion of energy is done by the battery. To control the rate of electron transfer, the cathode must be physically and electrically confined from the anode using an ionically conductive but electrically insulating medium, typically a liquid or polymeric electrolyte. Often a porous, electrically insulating separator is used for mechanical separation between the two electrodes to prevent short circuit [18].

The overall chemical reaction employed in the current generation of Li-ion batteries is:

$0.5Li + Li_{0.5}Co_2O_4 \leftrightarrow LiCoO_2$.

In the fully charged state, Li is stored in the anode material (e.g., graphite). During discharge, Li migrates from the anode through the electrolyte to the cathode in the form of Li+ ions and inserts into the cathode (e.g., $Li_{1.5}Co_2O_4$). Simultaneously, electrons are removed from the anode (oxidation); are transferred through an external circuit, which enables current to power a load; and enter the cathode (reduction) during the process. The discharge process continues until the potential difference between the two electrodes becomes too low, at which point the cell is fully discharged.

This process is reversed during charging. During the initial cycle of a battery, a thin film, known as the Solid Electrolyte Interphase (SEI), spontaneously deposits on the surface of electrodes as a result of the decomposition of the electrolyte. This film is usually electrically insulating but ionically conductive. Formation of the layer generally occurs at the graphitic anode, which operates at potentials at which the electrolyte is thermodynamically unstable (less than 600mV versus Li/Li^+), and creates a complex heterogeneous collection of phases and layers having many secondary interfaces. The composition, behavior, and properties of

the solid electrolyte interphase (SEI) vary with different electrode/electrolyte systems and operating conditions, and it is currently the focus of numerous studies on the interfacial structure and electrochemical dynamics. In conventional graphitic anodes, SEI growth occurs only during the first charge/discharge cycle to yield a stable passivating layer [19].

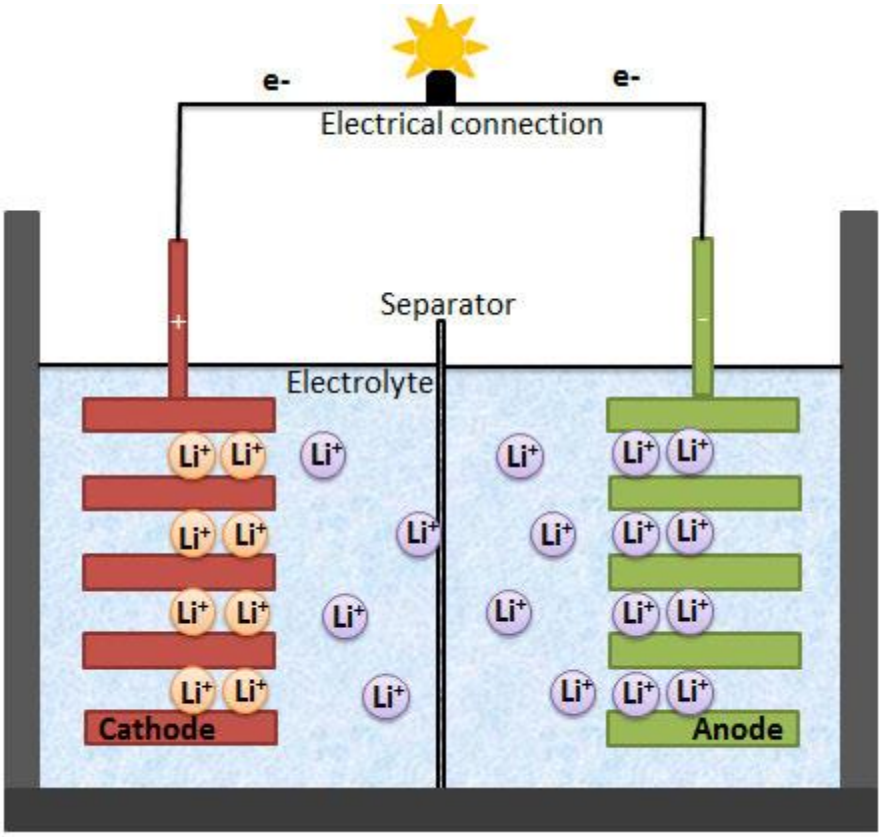

Fig.1. A Schematic of Lithium-Ion Battery

Lithium-ion batteries provide lightweight, high energy density power sources for a variety of devices. To power, larger devices, such as electric cars, connecting many small batteries in a parallel circuit is more effective than connecting a single large battery. Such devices include portable devices such as smartphones, laptops, tablets, digital cameras, handheld game consoles, etc. power tools such as cordless drills, sanders, saws, and variety of garden equipment can also be powered using lithium-ion batteries. It also finds a useful application in telecommunications [20].

Asian Journal of
Nanoscience and
Materials

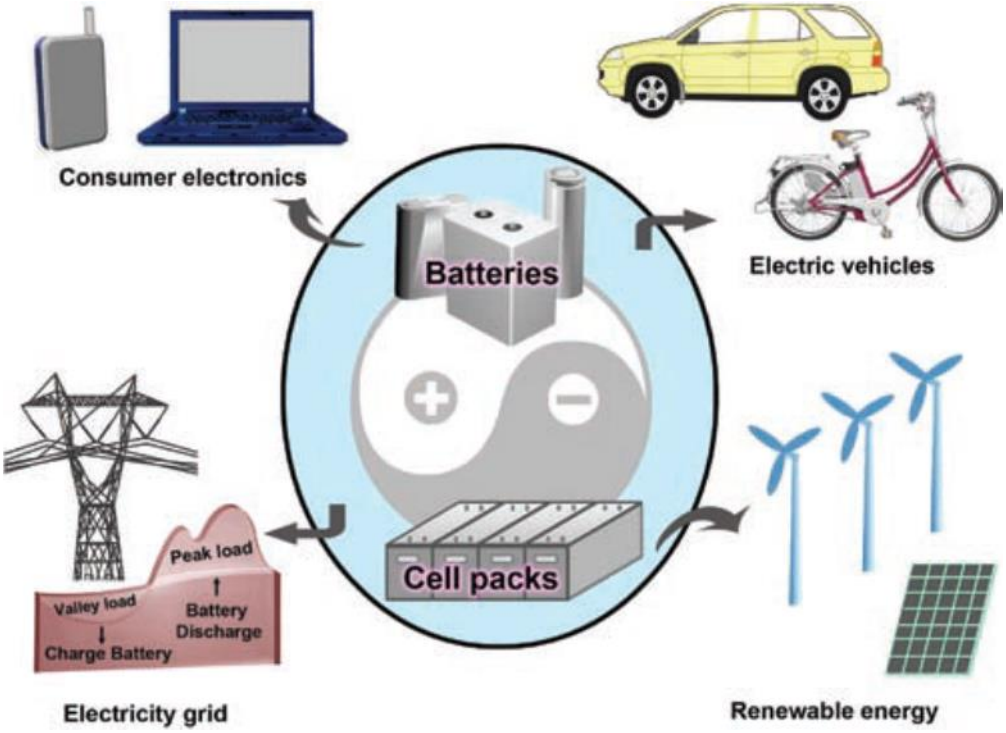

Fig. 2. Representative images of the application of lithium-ion battery [22]

Advances in organic electrolytes materials

Much have not been done about lithium-ion batteries electrolytes for long due to the new solvents designed to match the electrolytes specifications, and more attention are paid on synthesizing new electrode materials. The study that has been dedicated to the investigation of new electrolytes for lithium-ion batteries have focused on mixing different molecules. However, the recent developments of high voltage material for lithium-ion batteries have stimulated the synthesis of new solvent and new salt, more stable against oxidation [22]. Also, new teams are working in this field to develop a new electrolyte material that will be compatible with the next generation of high-density batteries. Such electrolytes are usually organic aprotic dipolar solvent or an ionic liquid in the presence of a lithium salt must exhibit the following specifications;

1) High ionic conductivity
2) Low viscosity
3) High dielectric constant
4) Good wettability towards separator and electrode

Asian Journal of Nanoscience and Materials

5) Low melting point
6) High flash point
7) Low cost
8) Environmentally friendly.

Ionic conductivity and viscosity are related to each other because a decrease of the viscosity of the electrolyte involves an increase of the ionic conductivity. Likewise, organic solvents with high dielectric constants are required because they promote salt dissociation, resulting in an increase of the ionic conductivity [23]. The ionic conductivity and the viscosity depend both on the nature of the solvent and the salt, while the dielectric constant only depends on the solvent. The electrochemical window depends on the solvent, the salt and the nature of the electrode because of electrocatalytic reactions.

Usually, the formulation of electrolytes for lithium-ion battery (LiBs) involves a mixture of a lithium salt and two or three solvents because all of the above-stated criteria cannot be achieved by using a single solvent. Lithium salts for LiBs must be soluble in dipolar aprotic solvents at a concentration close to 1M to achieve the maximum ionic conductivity. Such lithium salts should usually have a large anion to ensure a good dissociation in the solvents and to control ion-pair formation. Furthermore, these salts should be safe, they should exhibit a low environmental impact and a high oxidation potential, especially for high energy applications. However, they must form a good passivative layer at the negative electrode, especially when graphite is used.

In literature, the most studied salts are lithium perchlorate ($LiClO_4$), Lithium Hexafluoroarsenate ($LiAsF_6$), Lithium Tetrafluoroborate ($LiBF_4$), Lithium bis(trifluoromethanesulfonyl) imide (LiTFSI), Lithium Triflate (LiTf) and Lithium Hexafluorophosphate ($LiPF_6$)[24].

However, $LiPF_6$ is the most commercialized salt, and LiTFSI is more and commonly used in electrolytes for LiBs despite current collector corrosion issues at high voltage. Many dipolar organic solvents or ionic liquids in the presence of lithium salts were reported in the literature for their application as electrolytes in LiBs.[24-37].

Among these solvents, 7 families of molecules can be highlighted: carbonates, esters, ethers, acetals, sulfoxides, sulfites, and sulfones. Alkyl carbonates still remain the most used solvents in LiBs because of their good physicochemical and electrochemical

Asian Journal of
Nanoscience and
Materials

properties. In particular, ethylene carbonate is a must-have in electrolyte formulation for 4V batteries as this solvent leads to the formation of the high-quality passivative layer required to avoid graphite exfoliation during charge-discharge cycles [38]. However, alkyl carbonates are not compatible with high-voltage electrodes for 5V batteries, and it is important to find new electrolytes exhibiting higher anodic stability than alkyl carbonate for high energy density applications.

More than two decades back, Life cycle assessment has been applied to a number of industrial sectors, including production and use of LiBs. In a study on electric mobility, Hawkins *et al*. stated that electricity used to charge vehicle was several times more impactful than the production of the battery [39].

On LiBs, a recent review reported that the performance of the battery posed a greater effect on the environment compared to the materials that constitute the battery [40]. Nevertheless, both conclusions rely heavily on Global Warming Potential (GWP) and energy-related impacts because those were the categories most widely evaluated. Thus, it is possible that the environmental importance of batteries in general and battery materials, in particular, is higher than currently stated in the report. Such an idea has been supported by at least a recent study suggesting the environmental importance of battery and battery component production depend on the actual use of the battery [40].

There is a good agreement in the composition of the electrolyte between studies, i.e. approximately 85% solvent, and approximately 15% Li salts. They also correspond in identifying the electrolyte as one of the major key components of a cell, although its mass ranges between 10 and 26% of the full cell. Based on a recent report it is evident that the following trends between the chemical structure of the solvent and their physicochemical and electrochemical properties for the four main families of solvent used in lithium-ion–batteries (LiBs), i.e. carbonates, esters, ethers, and sulfones.

It appears that the addition of groups exhibiting electron withdrawing inductive effect improves the anodic stability of the electrolyte at the expense of other physicochemical properties such as the viscosity, the ionic conductivity, and the melting point [22].

Furthermore, the insertion of alkoxy groups in the chemical structure of the solvent is responsible for an improvement of the ionic conductivity and a decrease of the melting point while the loss of symmetry leads to an increase of the solvating power and a decrease of the melting point without significant change in oxidation potential.

By taking into account these effects and data previously reported, it would be interesting to explore two fields: functionalization of sulfones to improve their physicochemical properties, especially their viscosities and their ionic conductivities in the presence of lithium salts and development of new esters exhibiting better electrochemical properties.

Last but not least, the selection choice of the electrolytes must take into consideration the environmental impact of their products through the environmental footprint of the electrolyte in LiBs has so far been considered minor.

Nonetheless, LCA conducted in the present paper indicates that some solvents might potentially be more impactful than those already assessed in the literature. There seem to be important differences, not only between solvents but also between production paths for a given solvent [22].

However, LCI based on process data will be required to confirm these hypotheses. Finally, the choice of the electrolytes must also take into account their environmental impacts. Previous LCAs had concluded the effect of electrolyte and solvent productions were minor when compared to the manufacturing of the whole battery. However, their results indicate that there are several solvents more impactful than those already assessed in the literature. Thus, the performance benefits of including them in LiBs need to offset the potential increase of their environmental impact. Important differences between production methods, making necessary not only to select the optimal solvent but also to select the low impact source have been observed. Still, LCI based on process data will be required to confirm these hypotheses [22].

Advances in the organic electrode

Organic electrode materials, which consist of naturally abundant chemical elements (e.g. C, H, O, N, S), provide an alternative for developing greener and more sustainable energy storage devices [41-43]. Organic

Asian Journal of Nanoscience and Materials

electrode materials also have advantages of high capacity, good design-versatility, flexibility and environmental benignity [44-47]. Indeed, the employment of organic electrode materials in lithium batteries can be traced back to 1970s, as early as that of inorganic counterparts [48]. However, during that period, the former exhibited much poorer electrochemical performance in terms of cycle stability and rate capability compared to the latter. In the past decades, the growing concerns of resource and environment problems have revived interest in organic electrode materials, and furthermore, innovative approaches with great improvement of the electrochemical performance have been proposed [49-50].

To date, various kinds of organic materials, such as conducting polymers, [51-55] organosulfur compounds, [56-60], organic free radical compounds, [61-65] and organic carbonyl compounds, [66–70] have been investigated as electrode materials for lithium batteries. One of the most serious drawbacks plaguing organic materials (except conducting polymer) is their intrinsic low electrical conductivity. As a result, these organic electrodes require a large amount of conductive carbon (>30wt%) in order to maintain credible conductivity, which would inevitably decrease the energy density of the whole battery. In addition, most small organic molecules suffer from rapid capacity decay during cycling since they are highly soluble in traditional non-aqueous electrolytes.

To overcome this problem, several strategies including polymerization [67,68,71–74] salt formation, [75–80] employing quasi-/all-solid-state electrolytes, [81–84] and immobilization on specific solid substrates [85-86] have been proposed and proven to be effective means of addressing these issues. An intriguing approach that can simultaneously address the two main issues is coupling the organic materials with specific carbon substrates, such as Carbon Fibers (CF), Carbon Nanotubes (CNTs), graphene, and porous carbon.

Asian Journal of Nanoscience and Materials

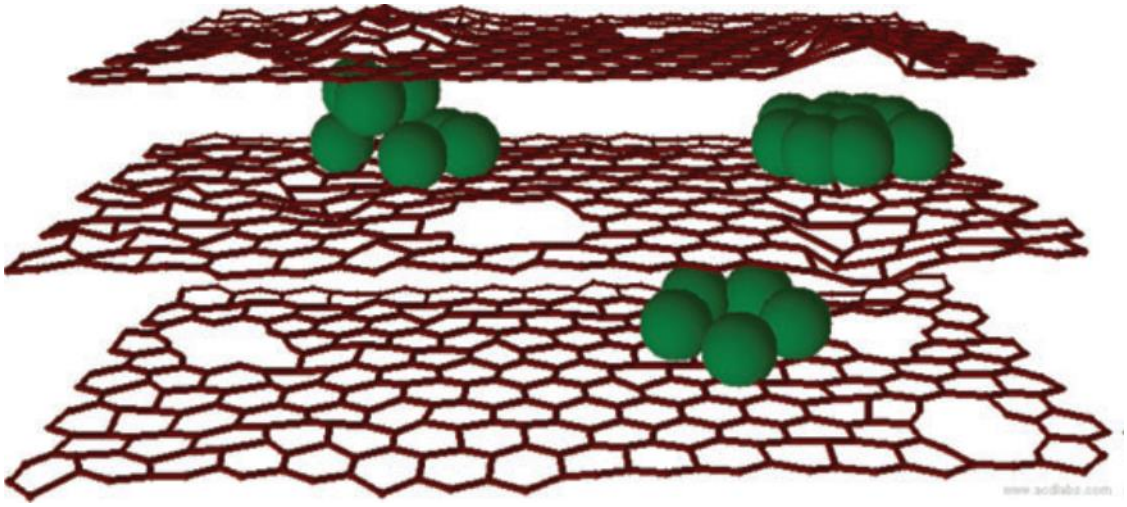

Fig. 3. Schematic drawing of a Si-graphenic composite electrode for Li-ion batteries, which is engineered with a flexible, 3D graphenic scaffold derived from graphene sheets with a high density of in-plane, nanometer-sized window-like vacancies that enable rapid cross-plane ion diffusion and hence high rate capacity. [86]

On the one hand, the interaction (e.g., van der Waals interaction, π-π stacking interaction, electrostatic interaction, and covalent interaction) between the two components can disallow the dissolution of soluble organic materials.

On the other hand, the conductive carbon matrix enables fast electron transportation during the electrode reaction. Therefore, both the cycle stability and rate capability can be enhanced. Although several papers have reviewed organic electrode materials for battery applications [42, 44, 57, 87–90], however, little attention has been concentrated on carbon-supported organic composites. Hence, a systematical introduction of the development and prospect of this field would be necessary. Organic electrode materials have also attracted increasing attention in recent years owing to their promising electrochemical performance and outstanding advantages in sustainability and environmental friendliness.

Organic electrodes are important for solid electrode batteries because they can make device cost-effective, allow flexibility, and can also open up opportunities for the use of multivalent ions without the problems typically associated with inorganic compounds [91-92].

Additionally, the special characteristic features of organic materials, such as structure diversity, solubility, flexibility, and processing ability, make them promising suitable candidates for cathodes or anodes of several

Asian Journal of Nanoscience and Materials

energy-storage devices, [92] including rechargeable Li, [94–99], Na, [97,100-102] and Mg batteries, [103], supercapacitors [104], thin-film batteries [105], aqueous rechargeable batteries [106- 107], redox flow batteries [108], and even all-organic batteries[101, 108-109]. Organic materials based on conjugated carbonyl compounds [110], especially quinones, are believed to be among the most promising types of organic lithium-storage electrodes due to their high theoretical capacity (up to 600 $mAhg^{-1}$), [92] high redox reversibility, and high resource availability.

For quinone-based materials, the commercial small organic molecules, such as benzoquinone (BQ), [111–113] naphthoquinone (NQ), anthraquinone (AQ) [94, 114-1155], and their derivatives, cannot be used directly in common rechargeable Li batteries with non-aqueous electrolytes. Under these conditions, the active materials (including their discharged forms) dissolve to a significant extent, which decreases their discharge/charge stability and results in poor cycle life. This problem can be alleviated, although not solved by enhancing the immobilization of active materials (e.g., by the formation of composites with carbon nanotubes [114] or mesoporous carbon [115]), or by using lithium-ion selective separators (e.g., LISICON [112] or PEO [113]) to prevent the dissolved molecules and/or anions from migrating to the anode side.

However, these methods still result in unsatisfactory long-term cycling performance. Thus, the most suitable approach is to develop inherently insoluble compounds containing dense quinone groups to satisfy the requirements for energy density and cycle life simultaneously.

In the past few years, some successful examples were reported, including organic polymers (e.g., PBQS [96] and PPYT [97]), organic salts (e.g., $Li_4C_8H_2O_6$ [108]), and oligomeric salts (e.g., Li_2PDHBQS [95]).

These materials show cycling stability comparable to that of inorganic layered oxides (for example, Li2PDHBQS retains 90% of its reversible capacity after 1500 cycles [95]), but still lag far behind zero-strain inorganic materials (e.g., LiFePO4 and Li4Ti5O12) with negligible capacity fading during hundreds of cycles.

To construct a polymer, the monomeric units can be linked by various organic groups, such as methylene (CH_2), [98] imine (NH), [116]

ether (O), and thioether groups (S), [94–96] or just grafted on a skeleton chain [97-106]. These approaches will lead to a decrease in theoretical capacity to varying degrees because of the addition of inactive moieties.

Ideally, the electro-active rings should be coupled directly without any linker. This approach would slightly increase the theoretical capacity and may facilitate electron transport along the chain because of enhanced structural conjugation.

Earlier studies found out that anthraquinone (AQ) rings can be coupled to form polyanthraquinone (PAQ) [117] through a one-step condensation polymerization reaction. [118] By using 1,4-dichloroanthraquinone (1,4-DCAQ) or 1,5-dichloroanthraquinone (1,5-DCAQ) as the monomer, we successfully synthesized poly(1,4-anthraquinone) (P14AQ) and poly(1,5-anthraquinone) (P15AQ), respectively, which we then applied as cathodes for rechargeable Li batteries. Both PAQs showed high electro-activity, and surprisingly, P14AQ showed exceptional comprehensive performance, superior to that of all previously reported organic electrodes, including the absence of capacity decay during 1000 discharge/charge cycles. Both PAQs were synthesized mainly according to a previously reported procedure [118] and characterized by various methods, including elemental analysis, FTIR and NMR spectroscopy, XRD, SEM, and thermogravimetric analysis.

Unlike P15AQ and previous polymer electrode materials, which are insoluble in common organic solvents, P14AQ is very soluble in chloroform. Moreover, the resulting transparent yellow solution can be readily cast to form a free-standing and flexible thin film.

These unique properties open up tremendous potential for the application of P14AQ in many novel battery designs, such as flexible thin-film batteries, printed batteries, and even transparent batteries. The structure-performance relationship between a monomer and polymers derived from the monomer by different linking methods is important for the design of high-performance polymer electrode materials but is rarely investigated.

The relationship between theoretical calculations and electrochemical tests was studied semi-quantitatively for the AQ monomer, poly(anthraquinonyl sulfide) (PAQS),[94] P14AQ, and P15AQ. It is well

Asian Journal of Nanoscience and Materials

known that the energy level of the Lowest Unoccupied Molecular Orbital (LUMO) of an n-type electro-active material is a useful parameter for estimating its relative redox potential (a lower LUMO energy level corresponds to a higher reduction potential).[95–97, 119] the optimized geometries of AQ, PAQS, P14AQ, and P15AQ by a method based on Density Functional Theory (DFT).

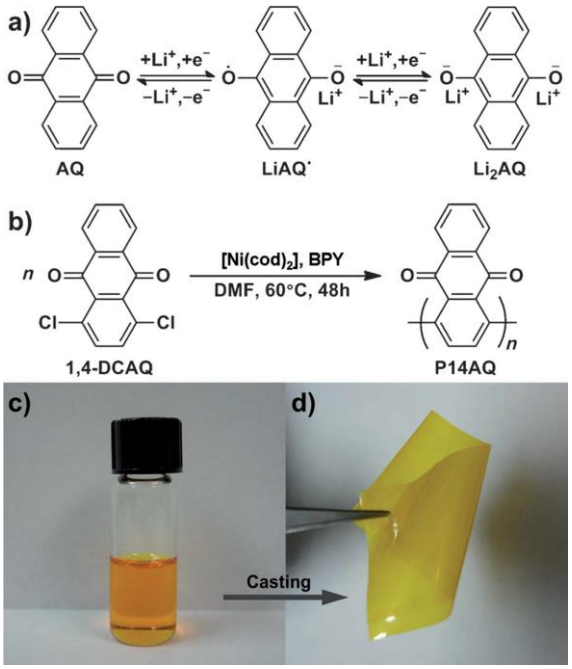

Fig. 4. (**a**.)Electrochemical redox mechanism of the AQ unit. (**b**) Synthetic route to P14AQ. (**c**) Photograph of a solution of P14AQ in chloroform (10 g). (**d**) Photograph of a free-standing and flexible P14AQ thin film (3.2 cm^2) cast from the solution. BPY=2,2'-bipyridine, cod=1,5-cyclooctadiene, DMF=N,N-dimethylformamide.[97]

The polymers were modeled as short chains containing five structural units to keep the calculations manageable; this approach has already been shown to be simple but effective [8]. For the AQ monomer, the LUMO energy level is located at 2.80eV (consistent with the previously reported value [31]), and the experimental discharge plateau is rather flat at 2.26V versus Li^+/Li (Figure 2b), thus showing a two-phase redox reaction between AQ and Li_2AQ. In contrast, each polymer has five nearly degenerate orbitals located nearby (the lower/upper values are 3.01/2.54, 2.72/2.59, and 2.72/2.55eV for PAQS, P14AQ, and

P15AQ, respectively), and the electron configurations of P14AQ and P15AQ are very similar.

Assuming that the electron configurations are rigid, electrons will successively fill the unoccupied orbitals from the lowest to the highest-energy orbital during the reduction process, thus leading to the experimentally observed sloping discharge curves of the polymers. The slopes for P14AQ and P15AQ are much smaller than that for PAQS since their characteristic energy levels are more intensive (the bandwidths are 0.47, 0.13, and 0.17eV for PAQS, P14AQ, and P15AQ, respectively).

The average discharge voltages of AQ, PAQS, P14AQ, and P15AQ are 2.24, 2.14, 2.14, and 2.09V versus Li^+/Li, respectively, thus following identical pattern in the relative position of the center of the energy-level band (2.80, 2.78, 2.65, and 2.63eV for AQ, PAQS, P14AQ, and P15AQ, respectively).

This trend is also reflected in the Cyclic Voltammetry (CV) curves, in which the peak widths of P14AQ and P15AQ are much narrower than that of PAQS; the cathodic peak voltages also approximately follow this trend. Thus, the difference in the electrochemical behavior of AQ and its polymers, despite their identical redox mechanism is well explained by the DFT calculations. The theoretical capacities calculated results obtained from the two-electron redox reaction of the AQ unit are 257, 225, 260, and 260mAhg^{-1} for AQ, PAQS, P14AQ, and P15AQ, respectively.

These values were used to express the current rate (mAg^{-1}) of 1 C for each material. At 0.2 C, the number of electrons transferred per unit is close to 2 for each material (2.04, 1.90, 2.02, and 1.85 for AQ, PAQS, P14AQ, and P15AQ, respectively), thus expressing the full utilization of AQ units for all materials.

However, the cycling performance of AQ and P15AQ leaves much to be desired. The discharge capacity retention at the 100th cycle was 17.8, 98.4, 98.3, and 67.6%, for AQ, PAQS, P14AQ, and P15AQ, respectively. It is easy to understand why the AQ monomer showed the worst cycling stability from the serious dissolution of its discharged form (Li_2AQ) in the electrolyte.

Of the polymers, only discharged P15AQ showed similar dissolution behavior, mainly due to the relatively low molecular weight of the polymer (ca. 230,000 for P14AQ and ca. 2300 for P15AQ, as estimated from the C/Cl

Asian Journal of Nanoscience and Materials

molar ratio; see the Supporting Information). The higher solubility of the discharged phases of these materials stands in contrast to the behavior of our previously studied 2,5-dihydroxy-pbenzoquinone- based materials, the discharged phases of which were less soluble because of enhanced O···Li···O coordination bonds.[95] As the AQ-based materials probably have less C=O and C-O bonds, but with larger steric hindrance, the O···Li···O coordination bonds formed in the discharged product are not strong enough to control the enhanced negative-charge repulsion between monomeric AQ rings or short polymer chains. The different dissolution behavior of the four materials agrees well with their different cycling performance, thus leading us to believe that the unfavorable dissolution is the dominating factor in capacity fading.

From the above comparisons, we can see that P14AQ displays the best electrochemical performance of the four materials, in terms of both discharge capacity and cycling stability. The energy density was calculated to be 560Whkg^{-1} (2.14V and 263mAhg^{-1}), which is actually slightly higher than that of $LiCoO_2$ (3.8V and 140mAhg^{-1} = 530Whkg^{-1}). The high-rate and long-term cycling performance of P14AQ were further studied under various test conditions. Relative to the maximum capacity of 263mAhg^{-1} at 0.2C, the capacity retention was 98, 96, 91, 84, 78, and 69% at increased current rates of 0.5, 1, 2, 5, 10, and 20C, respectively. P15AQ also shown similar rate capability if the capacity decay caused by dissolution is taken into account, thus indicating that its electrochemical performance could be enhanced to a level similar to that of P14AQ by increasing the molecular weight of the polymer. Little electrochemical polarization was observed in the corresponding voltage profiles of P14AQ; the average discharge voltage was 1.97V even at 20C (the value is 2.14V at 0.2C). A large capacity of 182mAhg^{-1}, corresponding to a large energy density of approximately 360Whkg^{-1}, was thus attained in nearly 2-min. This high-rate performance is superior to most other reported results for pristine organic or inorganic electrodes.

The reversible capacity reached 248 and 235mAhg^{-1}, respectively, after the several initial cycles of activation, and then remained very stable for 1000 cycles: The capacity retention was 98.1 and 99.4% after 1000

Asian Journal of Nanoscience and Materials

cycles at 1 and 2C, respectively. Moreover, the Coulombic efficiency stabilized above 99.8% at 1C or 99.9% at 2C after the first few cycles. The exceptional battery performance of P14AQ, in addition to its conducive solubility strength in chloroform and good film-forming ability, offer tremendous potential for applications in the next generation of high-performance, sustainable, green, and flexible energy-storage device.

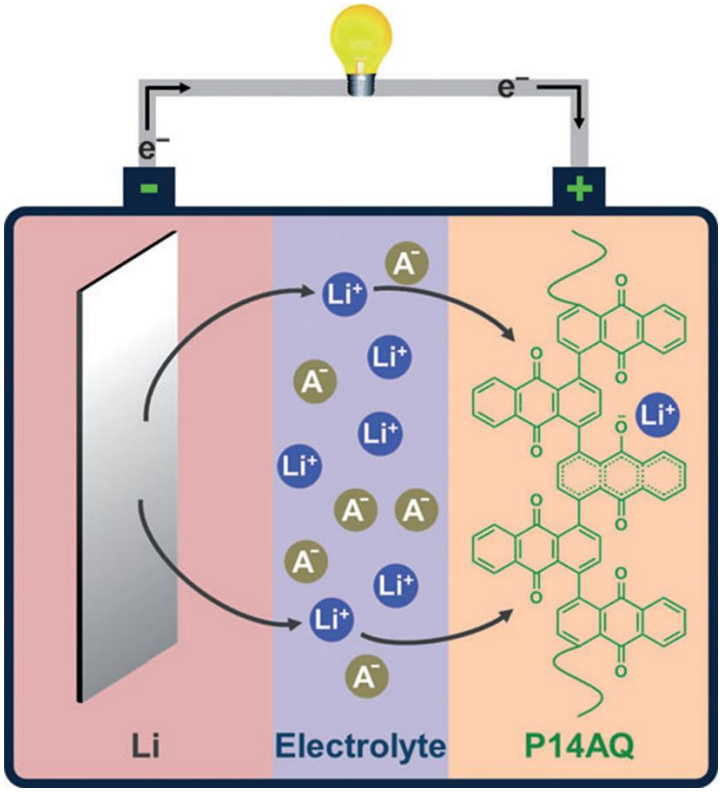

Fig. 5. An ideal polymer electrode based on anthraquinone, poly(1,4- anthraquinone) (P14AQ), was applied as a cathode for rechargeable lithium batteries . Unrivaled by other organic electrodes, it showed exceptional performance, including stable cycling (99.4% capacity retention after 1000 cycles) and fast discharge/charge ability (releasing 69% of the low-rate capacity or 64% of the energy in just 2 min).[97]

Asian Journal of
Nanoscience and
Materials

Challenges of organic-based batteries

Considering the resource abundance and environmental benignity of organic materials, organic/carbon composites should be very promising electrodes for sustainable and green rechargeable batteries. However, it should be borne in mind that there are still many challenges to address before practical applications fully be feasible.

First of all, the energy/power density and cycle stability of organic/carbon composite still need to be further improved especially with higher loading amount of the active materials. Secondly, large-scale production of organic/carbon composites with high and uniform quality still remains a challenge. Thirdly, although cells based on organic/carbon composite could work well in the lab-scale test, high-performance cells/batteries, it still suffers commercialization as feasibility is a challenge at industrial scale for now. Therefore, future researches are strongly suggested to be improved in such aspects. With deep exploration and investigation, we believe that carbon-supported organic electrodes will play an important role in future batteries.

The organic-based lithium-ion batteries or solid polymer electrolytes allow a wide variety of designs and provide means for complex nano and micro-structures which in turn can improve the performance of the device. These structural properties could not be achieved in liquid cells. Several issues still exist that need to be addressed before organic electrodes can become commercially viable, such as low cycling stability, low voltage, and low capacity. Strategies have been proposed to address these problems with varying success. The functionalization of small molecules with ionic groups, the incorporation of the redox functionalities into polymers and organic frameworks, and the adsorption of molecules onto highly conjugated, graphitic-like surfaces are all promising ways to improve the cycling stability of redox-active organic molecules and have even shown to improve other performance metrics such as rate capability.

The design of new electrolytes for lithium-ion batteries (LiBs) is a difficult task because electrolyte properties must match a great number of specifications such as high ionic. conductivity, low viscosity, the high dielectric constant of the solvent, good wettability towards separator and electrodes low melting point, high boiling point and high flash point for safety reason while

being as cheap as possible and as much as possible environmentally friendly.

Conclusion and future focus

Clearly, the amiable design of Carbon networks can remarkably enhance the electrode performance of the electro-active organic materials. First of all, the conductive carbon can largely influence the electrical conductivity of the insulating organics. Secondly, the interactions including covalent and non-covalent interactions between the Carbon matrix and organic molecules can effectively disallow the active materials from dissolving into the aprotic electrolytes. Thirdly, the toughness of the carbon matrix can elegantly accommodate the volume changes of organic materials during cycling. Organic electrodes are also important for solid electrode batteries because they can make device cost-effective, allow flexibility, and can also enable the use of multivalent ions without the problems typically associated with inorganic compounds.

More research should be focused on how to produce energy storage devices from organic based materials since they have shown high flexibility and low cost of production and also they have been able to address problems connected to in-organic based materials.

References

1. Vinodkumar,E. Rotem ,M.Ran,E.Gregory,S and Doron,A.(2011).

2. Challenges in the development of advanced lithium-ion batteries. Energy environ.sci.,**4,**3243-3263

3. Whittingham ,M.S. Chem. Rev. (2004) . **104** , 4271.

4. Cabana,J. Monconduit , L. Larcher ,D. Palacin ,M.R.(2010) Advance Materia . **22** , E170 .

5. Linden,David and Reddy, Thomas B.(2002). Handbook of batteries.35

6. Chang, Z.R. Lv ,H.J. Tang, H.W. Li, H.J. Yuan, X,Z. Wang,H.J.(2009). Synthesis and characterization of high-density LiFePO4/C composites as cathode materials for lithium-ion batteries. Electrochim. Act **54**:4595–99

7. Megahed, S. Scrosati, B. (1994). Lithium-ion rechargeable batteries. J. Power Sources **51**:79–104

8 Qi, Y. Harris, S.J.(2010). In situ observation of strains during lithiation of a

graphite electrode. J. Electrochem. Soc. **157**: A741–47

9. Whittingham, M.S. (2004). Lithium batteries and cathode materials. Chem. Rev. **104**:4271–301

10. Wang, Y. Cao, G.Z. (2008). Developments in nanostructured cathode materials for high-performance lithium-ion batteries. Adv. Mater. **20**:2251–69

11. Thackeray, M.M. David, W.I.F., Bruce. P.G. and Goodenough, J.B. (1983). Lithium insertion into manganese spinels. Mater. Res. Bull. **18**:461–72

12. Manthiram, A. Murugan, A.V. Sarkar, A. and Muraliganth, T. (2008). Nanostructured electrode materials for electrochemical energy storage and conversion. Energy Environ. Sci. **1**:621–38

13. Goodenough, J.B.and Kim, Y. (2010). Challenges for rechargeable Li batteries. Chem. Mater. **22**:587–603

14. Yuan, L.X. Wang, Z.H. Zhang,WX. HuXLChen ,JT. (2011). Development and challenges of cathode material for lithium-ion batteries. Energy Environ. Sci. **4**:269–84

15. Narayanan, S.R. Surampudi, S. Attia, A.I. and Bankston, C.P. (1991). Analysis of redox additive-based overcharge protection for rechargeable lithium batteries. J. Electrochem. Soc. **138**:2224–29

16. Golovin, M.N. Wilkinson, D.P. Dudley, J.T. Holonko, D. and Woo, S. (1992). Applications of metallocenes in rechargeable lithium batteries for overcharge protection. J. Electrochem. Soc. **139**:5–10

17. Abraham, K.M. (1993). Directions in secondary lithium battery research-and-development. Electrochim. Acta **38**:1233–48

18. Winter, M. Brodd, R.J. (2004). What are batteries, fuel cells, and supercapacitors? Chem. Rev. **104**:4245–69

19. Chan. C.K. Ruffo, R. Hong, S.S and Cui, Y. (2009). Surface chemistry and morphology of the solid electrolyte interphase on silicon nanowire lithium-ion battery anodes. J. Power Sources **189**:1132–40

20. Stefan, R.(2014). Lithium-ion laptop battery. Ultrabook batteries.

21. Cheng, F. Liang, J. Tao,Z and Chen, J.(2011). Functional material of rechargeable battery.

22. Benjamin, F.Gonzalo,R Marcel, W. Mansour, H. Phannarath, P. Virginie, R. and Alexandre ,C.(2017). Properties Guidelines to Design Organic Electrolytes for Lithium-ion Batteries: Environmental Impact,

Physicochemical and Electrochemical properties.1;1-2.

23. Chagnes, A. Swiatowska,J.(2012) in Lithium Ion Batteries - NewDevelopments, ed. Ilias Belharouak , InTech, Vienna, 1st edn, ch. 6, 145-172.

24. Chagnes, A. Swiatowska,J.(2015). in Lithium Process Chemistry: Resources,Extractions, Batteries and Recycling, ed. A. Chagnes, , Elsevier, Amsterdam, 1st edn, ch. 5, 167-189.

25. Chagnes,A. Carre,B. Lemordant, D. Willmann, P.(2001) Electrochim. Acta, 2001, **46** 1783.

26. Chagnes, A . Mialkowski, C. Carre, B. Lemordant, D. Agafonov,V. Willmann,P.(2001) Journal de Physique IV, **11**, 10.

27. Chagnes, A. Carre, B. Lemordant,D. Willmann,P.(2002) J. Power Sources, **109**, 203.

28. Geoffroy, I. Chagnes, A. Carre, B. Lemordant, D. Biensan,P. and Herreyre, S.(2001) J. Power Sources, 2002, **112**, 191.

29. Mialkowski,C. Chagnes,A. Carre,B Willmann, P Lemordant ,D. (2002).J Chem. Thermodyn., 2002, **34**, 1845.

30. Chagnes, A.Nicolis,S. Carre, B..Willmann,B Lemordant,D.(2003).ChemPhysChem, ,**4** 559.

31. Chagnes,A. Allouchi, H. Carre, B Oudou, G Willmann, P. Lemordant, J. Application Electrochem.**33**, 589.

32. Chagnes,A . Carre, B. Willmann, P. Dedryvere, R. Gonbeau,D Lemordant, D.(2003).Journal Electrochem. Soc., **159**, A1255.

33. Chagnes,A. Diaw, M.. Carre,B . Willmann,P Lemordant, Journal Power Sources, 2005, **145**, 82.

34. Diaw,M. Chagnes, A. Carre,B. Willmann, P Lemordant,D.(2005) Journal of Power Sources, **146**, 682.

35. Gzara,L. Chagnes,A. Carre,B. Dhahbi,M. Lemordant,D. (2006)Journal of Power Sources, **156**, 634.

36. Sun, X.G. Angell,C.G.(2005) Electrochem. Commun., **7**, 261.

37. Hofmann, A. Schulz,M. Indris, S. Heinzmann,R. Hanemann,T.(2014) Electrochim. Acta, **147**, 704.

38. Chagnes,A.(2015). in Lithium Process Chemistry: Resources,Extractions, Batteries and Recycling, ed. A. Chagnes, J. Swiatowska, Elsevier, Amsterdam, 1st edn, ch. 2,

41-80.

39. Hawkins, T.R.Gausen,O.M. Stromman, A.H (2012).International journal of Life CycleAssess. **17**, 997.

40. Bauer,C Hofer,J H. Althaus,J Del Duce,A and Simons, A.(2015).Applied Energy. **157**, 871.

41. Liang,Y. Tao,Z. and Chen,J.(2012). Adv. Energy Mater., **2**, 742 .

42. Milczarek, G. and Inganas, O. (2012)Science, **335**, 1468.

43. Song,Z. and Zhou,H.(2013) Energy Environ. Sci., **6**, 2280.

44. Han,X. Qing,G. Sun,J. and Sun,T.(2012) Angew. Chem. Inter. Ed., **51**, 5147 .

45. Liang,Y. Zhang,P and Chen,J.(2013). Chem. Sci., **4**, 1330 (.

46. Lee,M. Hong,J. Seo, D.H. Nam,D.H Nam,D.T Kang,K and Park,C.B.(2013) Angew.

Chem. Int. Ed., **52**, 8322 .

47. Hong,J. Lee,M. Lee,B. Seo, D Park,C.B and Kang,K.(2014) Nat. Commun., **5**, 5335 .

48. Williams,D.L. Byrne,J.J and Driscoll,J.S.(1969). J. Electrochem. Soc., **116**, 2 .

49. Chen, H. Armand ,M. Demailly, G. Dolhem, F. Poizot, P. and Tarascon, J.M.(2008).ChemSusChem, **1**, 348 .

50. Poizot.P and Dolhem,F.(2011). Energy Environ. Sci., **4**, 2003 .

51. Nigrey, P.J Maclnnes, D. Nairns, D.P. and MacDiarmid,A.G.(1981). J. Electrochem. Soc., **128**, 1651 .

52. Shacklette, L.W. Toth, J.E. Murthy, N.S. and . Baughman, R.H.(1985). J. Electrochem Soc., **132**, 1529 (1985).

53. Mermilliod, N. Tanguy, J. and Petiot,F.(1986). J. Electrochem. Soc., **133**, 1073 .

54. Gospodinova, N. and. Terlemezyan, L.(1998) Prog. Polym. Sci., **23**, 1443 .

55. Zhou, M. Qian, J Ai, X. and Yang, H.(2011). Adv. Mater., **23**, 4913 .

56. Visco, S.J and De Jonghe, L.C.(1988) J. Electrochem. Soc., **135**, 2905 .

57. Liu, M. Visco, S.J. and De Jonghe,L.C.(1990). J. Electrochem. Soc., **137**, 750 .

58. Oyama, N. Tatsuma, T. Sato, T. and Sotomura, T.(1995) Nature, **373**, 598.

59. Naoi, K. Kawase, K.I. Mori, M. and Komiyama, M. J. Electrochem

60. Oyama, N. Pope, J.M. and Sotomura, T.(1997). J. Electrochem. Soc., **144**, L47 (1997).

61. Nakahara, K. Iwasa, S. Satoh, M. Morioka, Y. Iriyama, J. Suguro, M. and

Hasegawa, E.(2002). Chem. Phys. Lett., **359**, 351.

62. Nishide, H. Iwasa, S. Pu, Y.J. Suga, T. Nakahara, K. and Satoh, M.(2004). Electrochim.Acta, **50**, 827 .

63. Suga, T. Konishi, H. and Nishide, H.(2007).Chem. Commun., **17**, 1730 .

64. Oyaizu, K. Suga, T. oshimura, K.Y. and Nishide, H.(2008). Macromolecules, **41**, 6646.

65. Choi, W. Ohtani, S. Oyaizu, K. Nishide, H. and Geckeler, K.E. (2011). Adv. Mater., **23**, 4440 .

66. Tobishima, S.I. Yamaki, J.I. and Yamaji, A. (1984). J. Electrochem. Soc., **131**, 57 .

67. Foos, J.S. Erker, S.M. and Rembetsy, L.M. (1986). J. Electrochem. Soc., **133**, 836 .

68. H¨aringer, D. Nov´ak, P. Haas, O. Piro, B.and Pham, M.C. (1999). J. Electrochem. Soc., **146**, 2393 .

69. Fedele, L. Sauvage, F. Bois, J. Tarascon, J.M. and Becuwe, M. (2014). J. Electrochem. Soc.,**161**, A46 .

70. Chen, D. Avestro, A.J. Chen, Z. Sun, J. Wang, S. Xiao, M. Erno, Z. Algaradah, M.M. Nassar, M.S. Amine, K. Meng, Y.and Stoddart, J.F. (2015). Adv. Mater.,**27**, 2907 .

71. Han, X. Chang, C. Yuan, L. Sun, T.and Sun, J. (2007). Adv. Mater., **19**, 1616 .

72. Song, Z. Zhan, H. and Zhou, Y. Angew.(2010). Chem. Int. Ed., **49**, 8444 .

73. Nokami, T. Matsuo, T. Inatomi, Y. Hojo, N. Tsukagoshi, T. Yoshizawa, H. Shimizu, A. Kuramoto, H. Komae, K . Tsuyama, H. and Yoshida, J. (2012) Journal American. Chemical society **134**, 19694 (2012).

74. Liang, Y. Chen, Z. Jing, Y. Rong, Y. Facchetti, A. and Yao, Y.(2015) J. Am. Chem. Soc.,**137**, 4956 .

75. Xiang, J. Chang, C. Li, M. Wu, S. Yuan, L. and Sun, J. (2008). Cryst. Growth Des., **8**, 280.

76. Armand, M.Grugeon, S. Vezin, H. Laruelle, S. Ribiere, P. Poizot, P. and Tarascon, J.M. (2009). Nat. Mater., **8**, 120 .

77. Chen, H. Armand, M. Courty, M. Jiang, M. Grey, C.P. Dolhem, F. Tarascon,J.M. and Poizot, P.(2009). J. Am. Chem. Soc., **131**, 8984 .

78. Chen, H. Poizot, P. Dolhem, F. Basir, N.I. Mentr´e, O. and Tarascon, J.M.(2009). Electrochem. Solid-State Lett., **12**, A102 .

79. Wang, S. Wang, L. Zhang, K. Zhu, K. Tao, Z. and Chen, J.(2013). Nano Lett., **13**, 4404.

80. Luo, C. Huang, R. Kevorkyants, R. Pavanello, M. He, H. and Wang, C. (2014). Nano Lett., **14**, 1596.

81. Hanyu , Y.and Honma, I.(2012). Sci. Rep., **2**, 453 .

82. Huang, W. Zhu, Z. Wang, L. Wang, S. Li, H. Tao, Z. Shi, J. Guan,L. and Chen, J.(2013). Angew. Chem. Int. Ed., **52**, 9162 (2013). Journal of The Electrochemical Society, **162** (14) A2393-A2405 (2015) A2405

83. Hanyu, Y. Ganbe, Y. and Honma, I.(2013). J. Power Sources, **221**, 186 .

84. Zhu, Z.Hong, M. Guo, D. Shi, J. Tao, Z. and Chen, J.(2014). J. Am. Chem. Soc., **136**, 16461.

85. Genorio, B. Pirnat, K. Cerc-Korosec, R. Dominko, R. and Gaberscek, M. (2010).Angew.
Chem. Int. Ed., **49**, 7222 .

86. Pirnat, K. Dominko, R. Cerc-Korosec, R. Mali, G. Genorio, B. and Gaberscek, M.(2012).J. Power Sources, **199**, 308 .

87. Nov´ak, P. M¨uller, K. Santhanam, K.S.V. and Haas, O.(1997). Chem. Rev., **97**, 207 .

88. Janoschka, T. Hager, M.D.and Schubert, U.S. (2012). Adv. Mater., **24**, 6397 .

89. Gracia, R. and Mecerreyes, D.(2013). Polym. Chem., **4**, 2206 .

90. H¨aupler, B. Wild, A.and Schubert, U.S.(2015). Adv. Energy Mater., **5**, 1402034 .

91. Liang, Y. Tao, Z. Chen, J (2012). Adv. Energy Mater. **2**, 742 – 769.

92. Song, Z. Zhou, H.(2013).Energy Environ. Sci**. 6,** 2280 – 2301.

93. Chen, H. Armand, M. Demailly, D. Dolhem, F.. Poizot, M.. Tarascon, J.-M.(2008). ChemSusChem **1**, 348 – 355.

94. Armand, M. Grugeon, S. Vezin, HLaruelle, . S. P. Ribi_re, . P Poizot, . P.. Tarascon, J.-M. (2009).Nat. Mater**. 8,** 120 – 125.

95. Song, Z. Zhan, H. Zhou, Y. (2009). Chem. Commun. 448 – 450.

96. Song, Z. Qian, Y. Liu, X. Zhang, T. Zhu, Y. Yu, H. Otani, M. Zhou, H.(2014). Energy Environ. Sci**. 7,** 4077 – 4086.

97. Song, Z. Qian, Y. Zhang, T. Otani, M. Zhou, H. (2015).Adv. Sci. , 1500124.

98. Nokami, T. Matsuo, T. Inatomi, Y. Hojo, N.Tsukagoshi, T. Yoshizawa, H. Shimizu, A. Kuramoto, H. Komae, K. Tsuyama, H. Yoshida, J.-i. (2012). J. Am. Chem. Soc. **134,** 19694 – 19700.

99. Huang, W. Zhu, Z. Wang, L. Wang, S. Li, H.Tao, Z. Shi, J. Guan, L. Chen, J.

(2013).Angew. Chem. Int. Ed. **52,** 9162 – 9166; Angew. Chem. 2013, 125, 9332 – 9336.

100. Zhao, L. Zhao, J. Hu Y.-S., Li, H. Zhou, Z. Armand, M. Chen, L.(2012).Adv. Energy Mater., 2, 962 – 965.

101. Wang, H.-g Yuan, S. Ma, D.-lHuang, . X.-l. Meng, . F.-l Zhang, X.-b. (2014). Adv. Energy Mater. 4, 1301651.

102. Wang, S. Wang, L. Zhu, Z. Hu, Z. Zhao, Q. Chen,J. (2014). Angew. Chem. Int. Ed. 2014**, 53,** 5892 – 5896; Angew. Chem. **126,**6002 – 6006.

103. Sano, H. Senoh, H. Yao, M. Sakaebe, H. Kiyobayashi, T.(2012). Chem.Lett**. 41,** 1594 – 1596.

104. Snook, G.A. Kao, P. Best, A.S. (2011). J. Power Sources **196**, 1–12.

105. Wu, H . Shevlin, . S. A. Meng, Q.Guo, W. Meng, Y. Lu, K.Wei, Z. Guo, Z. (2014).Adv. Mater. **26,** 3338 – 3343.

106. Choi, W. Harada, D. Oyaizu, K. Nishide, H.(2011). J. Am. Chem. Soc. **133,** 19839 – 19843.

107. Qin, H. Song, Z. PZhan, . H. Zhou, Y. H. (2014) . J. Power Sources **249,** 367 – 372.

108. Brushett, F. RVaughey, . J. T. . Jansen, A. N .(2012).Adv. Energy Mater.**2**, 1390 – 1396.

109. Wang, S. Wang, L Zhang, . K. Zhu, Z. Tao, Z. (2013).J. Chen, Nano Lett. **13,** 4404 – 4409.

110. Upler, B. H Wild A. Schubert, U. S. (2015). Adv. Energy Mater**. 5,** 1402034.

111. Yao, M. Senoh, HYamazaki, . S.-i. Siroma, Z. Sakai, T. Yasuda, K.(2010). J. Power Sources **195,** 8336 – 8340.

112. Senoh, H. Yao, M. Sakaebe, H. Yasuda, K. Siroma, Z.(2011). Electrochim. Acta **56,** 10145 – 10150.

113. Hanyu, Y. Ganbe, Y. Honma, I. (2013). J. Power Sources **221**, 186 –190.

114. Lee, M. Hong, J. Kim, H. Lim, H.-D. Cho, S. B. Kang, K. Park, C. B. (2014). Adv. Mater. **26,** 2558 – 2565.

115. Zhang, K. Guo, C. Zhao, Q. Niu, Z. (2015).J. Chen, Adv. Sci. **2,** 1500018.

116. Vlad, A. Arnould, K. Ernould, B. Sieuw, L. Rolland, J. Gohy, J.-F. (2015). J. Mater. Chem. A **3,** 11189 – 11193.

117. Zhou, Y. Wang, B. Liu, C.Han, N. Xu, X. Zhao, F.Fan, J. Li, Y.(2015). Nano Energy **15,** 654 – 661.

118. Yamamoto, T. Etori, H. (1995). Macromolecules 28, 3371 – 3379.

119. Yao, M. Yamazaki, S.-i. Senoh, H. Sakai, T. Kiyobayashi,T. (2012).Mater. Sci. Eng. B 17**,** 483 – 487.

Asian Journal of Nanoscience and Materials

How to cite this manuscript: Mutiat Salami, Hitler Louis, Saud-uz-Zafar, Oluwatobi O. Amusan, Thomas O. Magu, Adejoke T. Hamzat, Amos I. Pigweh, Ozioma U. Akakuru, Aderemi T. Adeleye , Benedict Iserom Ita. Polymer-based Material for Lithium-Ion Batteries: Material Engineering, Structure, Device Performance and Challenges. Asian Journal of Nanoscience and Materials, 2018, **2**(1) , 1-26.